LPC

WEB GUIDE SYSTEM

03

Driving Device
Actuator
Roll Guider
Control Motor

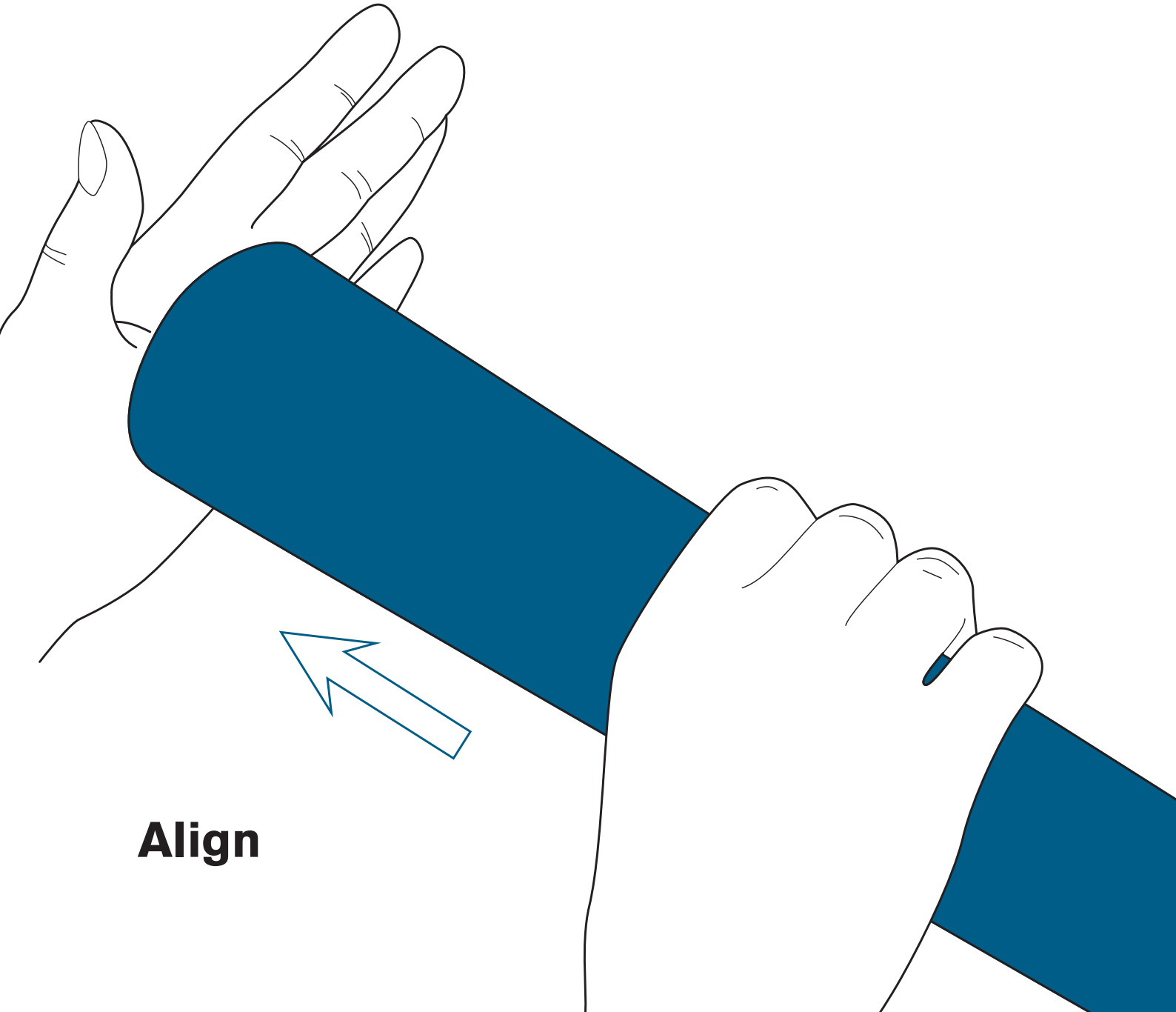

Align

Feature

1. Since a DC motor is mounted as source of driving, meandering control with quick rise characteristics and high accuracy is possible.

2. The switch unit contains a micro switch for the detection of center position (center position of driving range). If [center stop mode] is chosen with a controller, Actuator can be beforehand united with a center position.

3. As ball screws are used in the driving mechanism, little or no parts components become worn, thus providing longer service life and ease of maintenance and inspection.

4. Since the system operates on electrical type and eliminates the possibility of oil lead, unlike the hydraulic type, it can be applied in environments where cleanliness is required.

5. The System generates almost no noise during operations.

General Description

The Driving Units used for LPC Web Guide system is consist of linear type "Actuator", turning type "Roll Guider" and rotation type "Control Motor", applied to its movement.
Two types of Actuators, "For Reel Stand driving" and "For Sensor moving" are provided for you use.
Two types of Roll guider "Off-set type (Displacement Guide)" and "End-pivot type (Steering Guide)" are provided for you use.
And each equipment are provided several types for fitting you specifications.
Select the best fitting type for you use referring to the System Chart as below and the specifications showing later.

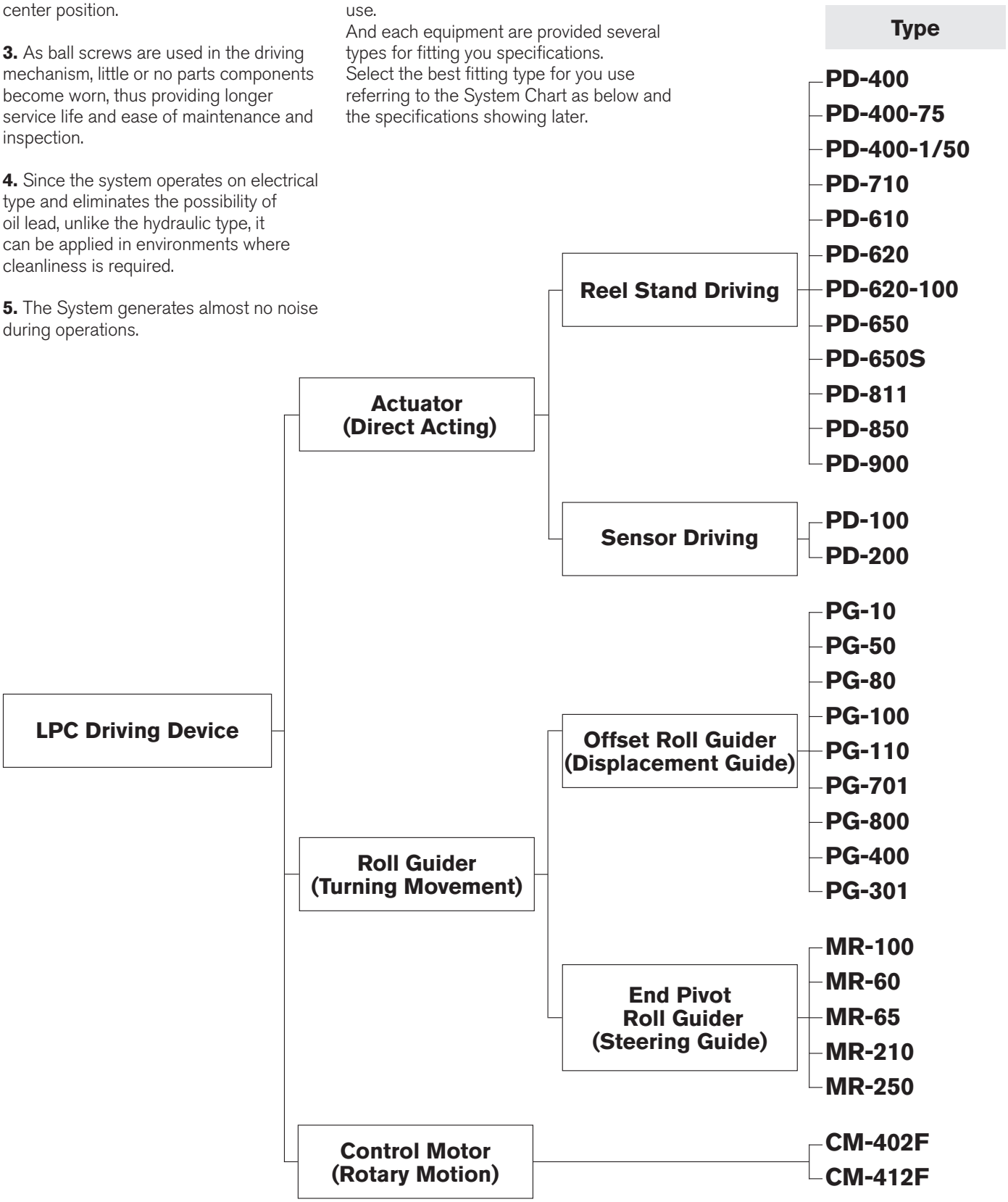

1. Reel Stand Driving Actuator

Specification

Type	Allowable thrus N[kgf]	Allowable mass kg	Stroke mm	Driving speed mm/sec	DC Motor	mass kg
PD-400	392 [40]	1330	50	20	DC24V 1.5A	6
PD-400-75	392 [40]	1330	75	20	DC24V 1.5A	6
PD-400-1/50	1666 [170]	5666	50	4	DC24V 1.4A	6
PD-710	412 [42]	1400	100	13	DC24V 1.2A	12
PD-610	490 [50]	1660	180	16	DC24V 1.5A	11
PD-620	372.4 [38]	1266	180	18	DC24V 1.2A	9
PD-620-100	372.4 [38]	1266	100	18	DC24V 1.2A	8
PD-650	1039 [106]	3530	180	13	DC24V 2.4A	18
PD-650S	980 [100]	100	180	2.8	DC24V 2.4A	27
PD-811	1725 [176]	5860	180	13	DC24V 3.8A	30
PD-850	2744[280]	9425	180	13	DC24V 6A	36
PD-900	3920 [400]	13330	180	16	DC24V 11A	85

※ 1. 1N=0.102kg　※ 2. Ambient air temperature　0℃～ 50℃　※ 3. PD-650 S-PD-900 is a semi- standard model.

PD-400

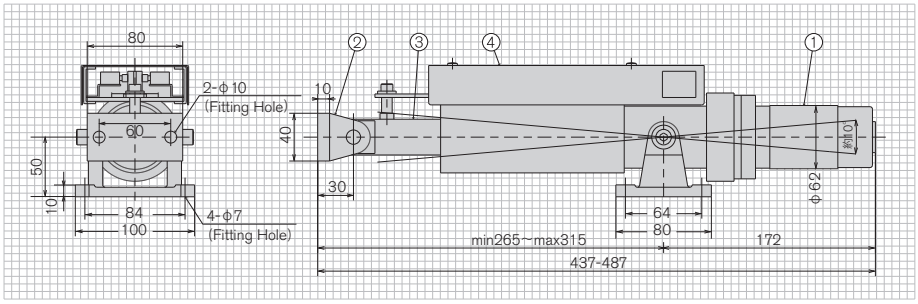

① DC Motor　② Connector　③ Sliding Rod　④ Switching Unit

PD-400-75

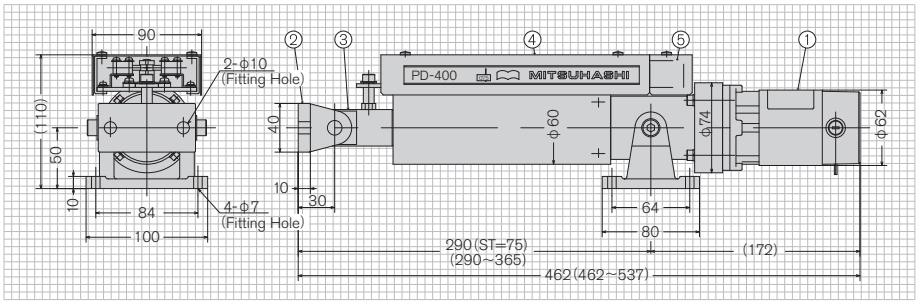

① DC Motor　② Connector　③ Sliding Rod　④ Switching Unit　⑤ Terminal Block

PD-400-1/50

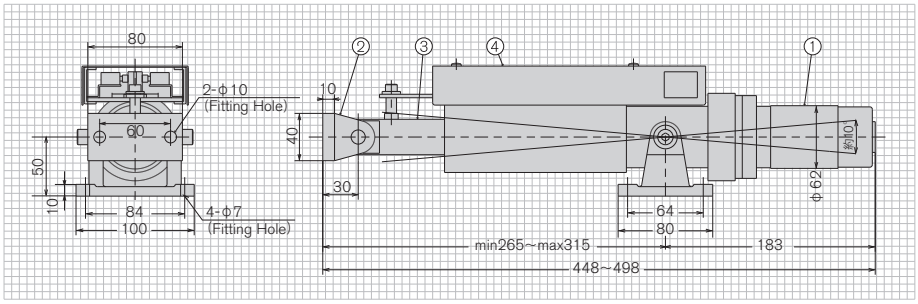

① DC Motor　② Connector　③ Sliding Rod　④ Switching Unit

PD-710

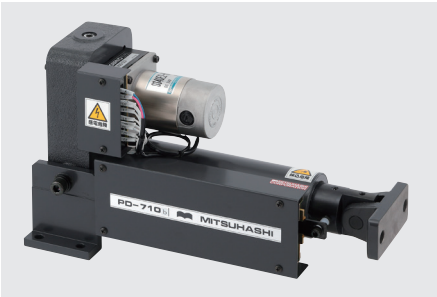

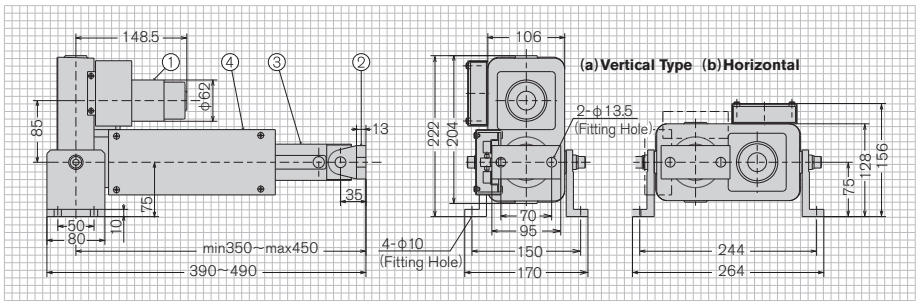

① DC Motor ② Connector ③ Sliding Rod ④ Switching Unit

PD-610

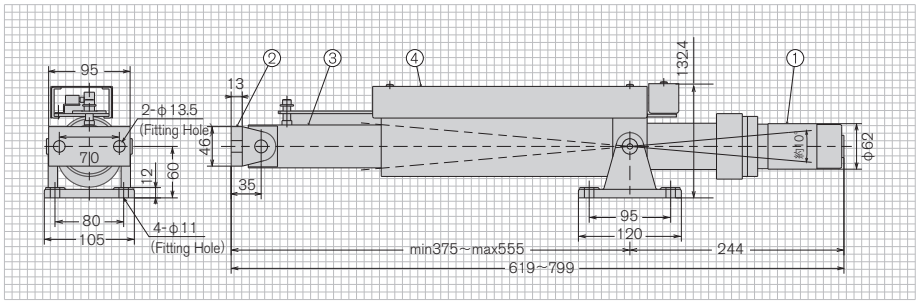

① DC Motor ② Connector ③ Sliding Rod ④ Switching Unit

PD-620

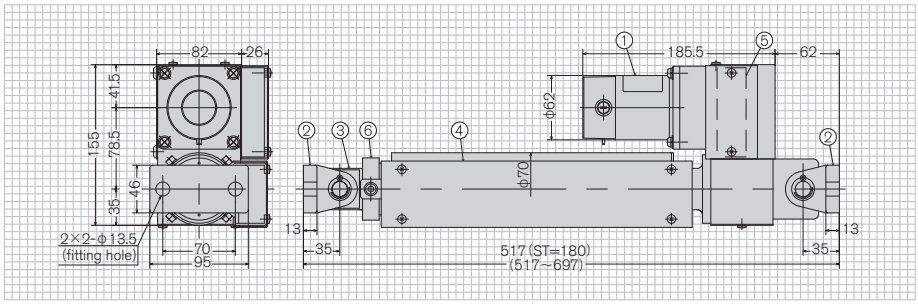

① DC Motor ② Connector ③ Sliding Rod ④ Switching Unit ⑤ Terminal Stand
⑥ Collar

PD-620-100

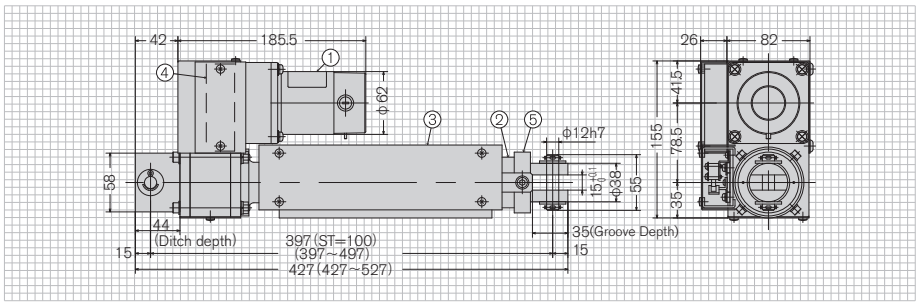

① DC Motor ② Sliding Rod ③ Switching Unit ④ Terminal Stand ⑤ Collar

PD-650

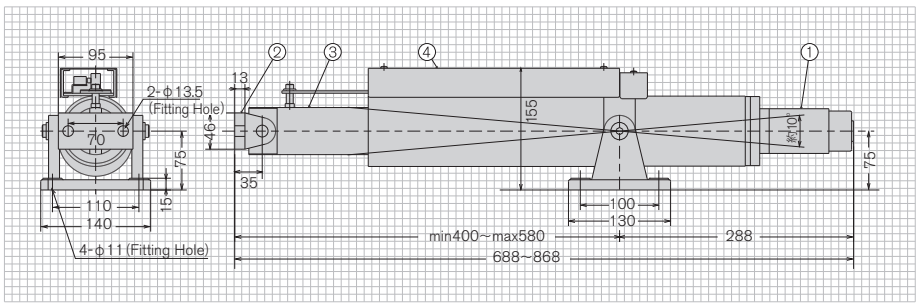

① DC Motor ② Connector ③ Sliding Rod ④ Switching Unit

PD-650S

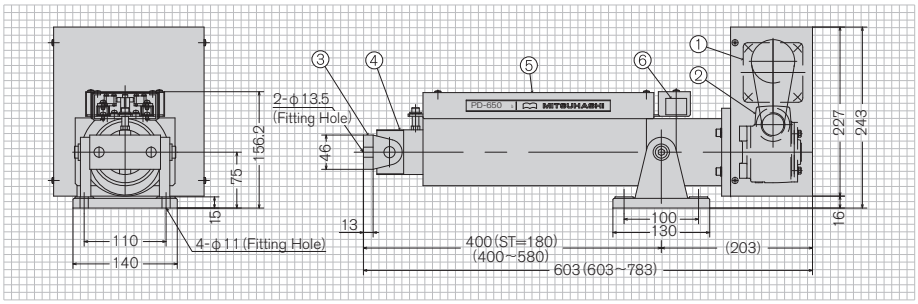

① DC Geared Motor ② Worm Reduction Gear ③ Connector ④ Sliding Rod
⑤ Switching Rod ⑥ Terminal Block

PD-811

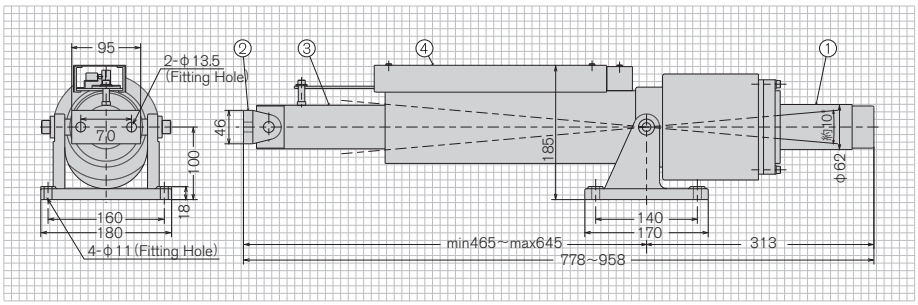

① DC Motor ② Connector ③ Sliding Rod ④ Switching Unit

PD-850

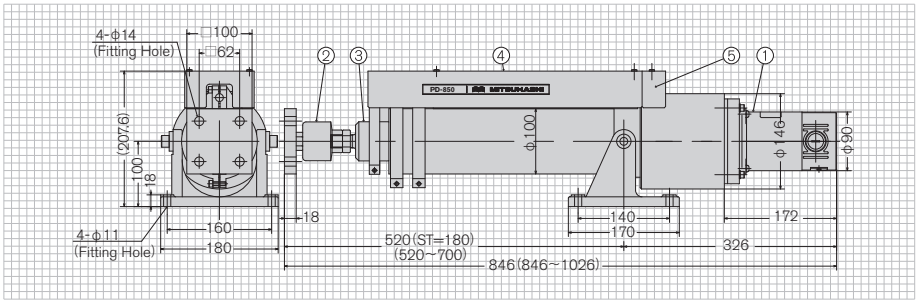

① DC Geared Motor ② Floating Joint ③ Sliding Rod ④ Switching Unit
⑤ Terminal Block

PD-900

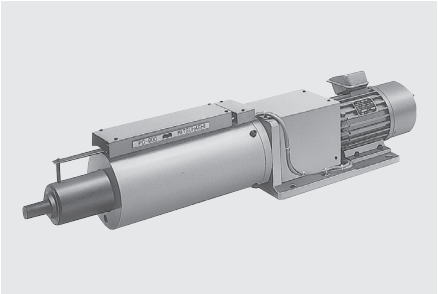

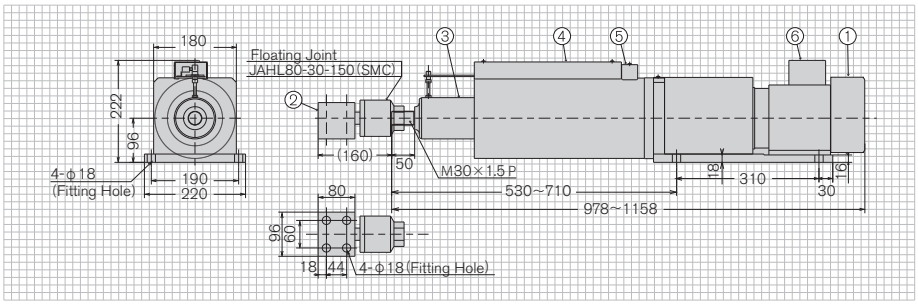

① DC Motor ② Connector ③ Sliding Rod ④ Switching Unit ⑤ Terminal Block
⑥ Motor Terminal Box

2. Sensor Driving Actuator

Specification

Type	Allowable mass kg	Stroke mm	Driving speed mm/sec	DC Motor	Mass kg
PD-100	14	210	13	DC24V 0.6A	6
PD-200	35	400	13	DC24V 1.5A	19

※ Ambient Temperature 0℃～ 50℃

PD-100

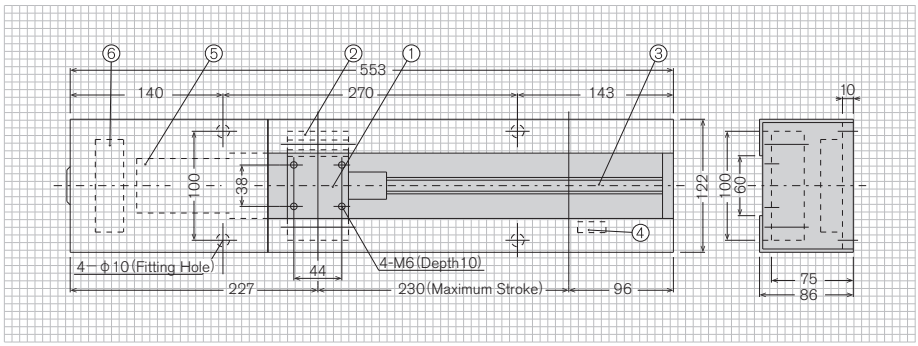

① Mounting Plate ② Boll Bush ③ Boll Screw ④ Limit Switch ⑤ DC Motor
⑥ Terminal block

PD-200

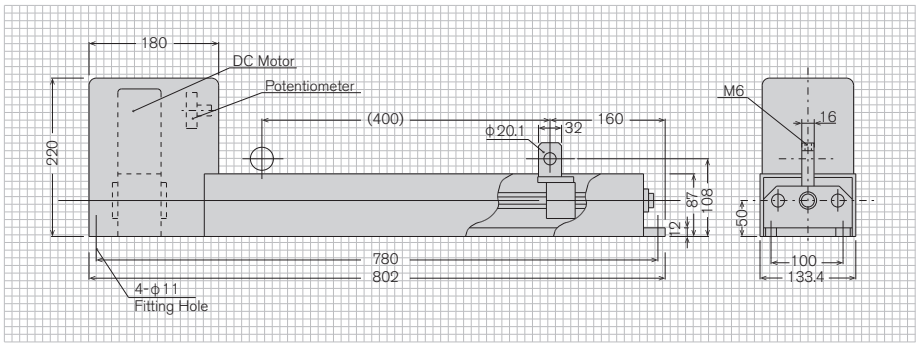

ROLLGUIDERS

Feature

1. It's most suitable for meander correction on the web machining line way (positioning).
2. Each sensor can be used in combination with the controllers for the edge control and the centering control.
3. Since a DC motor is mounted as source of driving, meandering control with quick rise characteristics and high accuracy is possible.
4. The switch unit contains a micro switch for the detection of center position (center position of driving range). If [center stop mode] is chosen with a controller, Actuator can be beforehand united with a center position.
5. Since the system operates on electrical type and eliminates the possibility of oil lead, unlike the hydraulic type, it can be applied in environments where cleanliness is required.

The example of use All Roll Guider set the roll according to a use.

Offset Roll Guider
(Displacement Guide)

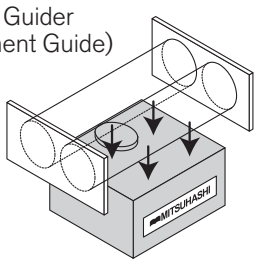

End Pivot Roll Guider
(Steering Guide)

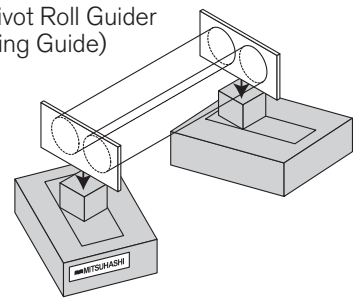

1. Offset Roll Guider (Displacement Guide)

A roll frame depends on amount of transfer of the exit side roll when turning moved in the inlet side roll center as a fulcrum, and meander of a web is corrected. Although a web is twisted by these circling movements, since distortion caused to both ends is small, it is suitable for control of the material extended easily and the material which it is hard and is easy to carry out permanent modification.

Type	DC Motor	Correction Speed mm/sec	Maximum Correction Stroke mm	Web Speed m/min	Web Tension N/kgf	Roll Length mm	Roll Diameter mm	Roll Span mm
PG-10	DC24V 0.4A	7.5 (Roll Span at 50mm)	± 6 (Roll Span at 50mm)	100 (MAX)	図 1 参照	100 ~ 200	φ 38 (Standard)	50 ~ 120
PG-50	DC24V 0.45A	9.5 (Roll Span at 125mm)	± 9 (Roll Span at 125mm)	100 (MAX)	図 1 参照	100 ~ 300	φ 46 (Standard)	125 ~ 200
PG-100	DC24V 0.4A	16 (Roll Span at 200mm)	± 13 (Roll Span at 200mm)	100 (MAX)	図 1 参照	100 ~ 300	φ 46 (Standard)	50 ~ 200
PG-110	DC24V 0.4A	12 (Roll Span at 100mm)	± 10 (Roll Span at 100mm)	100 (MAX)	図 1 参照	100 ~ 300	φ 46 (Standard)	50 ~ 200
PG-80	DC24V 0.4A	11 (Roll Span at 200mm)	± 13 (Roll Span at 200mm)	100 (MAX)	図 2 参照	100 ~ 300	φ 46 (Standard)	50 ~ 200
PG-800	DC24V 0.4A	6.5 (Roll Span at 200mm)	± 13 (Roll Span at 200mm)	100 (MAX)	図 2 参照	100 ~ 300	φ 46 (Standard)	50 ~ 200
PG-701	DC24V 0.7A	7 (Roll Span at 300mm)	± 25 (Roll Span at 125mm)	150 (MAX)	図 2 参照	300 ~ 600	φ 78 (Standard)	180 ~ 400
PG-400	DC24V 1.5A	24.5 (Roll Span at 400mm)	± 29 (Roll Span at 400mm)	300 (MAX)	490 (MAX) [50]	600 ~ 1600	φ 100 (Standard)	200 ~ 400
PG-301	DC24V 2.0A	13 (Roll Span at 900mm)	± 50 (Roll Span at 900mm)	350 (MAX)	980 (MAX) [100]	800 ~ 2000	φ 100 ~ 150	300 ~ 900

※ 1. 1N=0.102kg　※ 2. Ambient Temperature 0℃~ 50℃

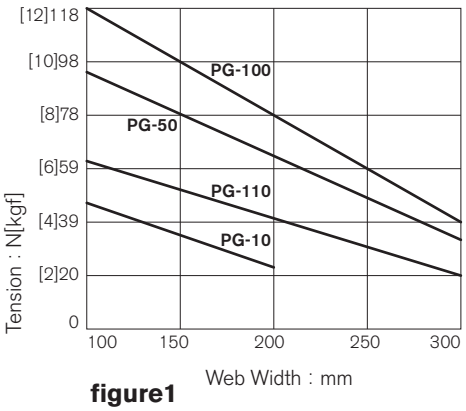

figure1

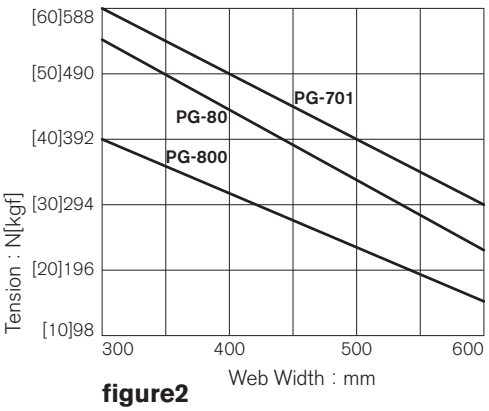

figure2

PG-10

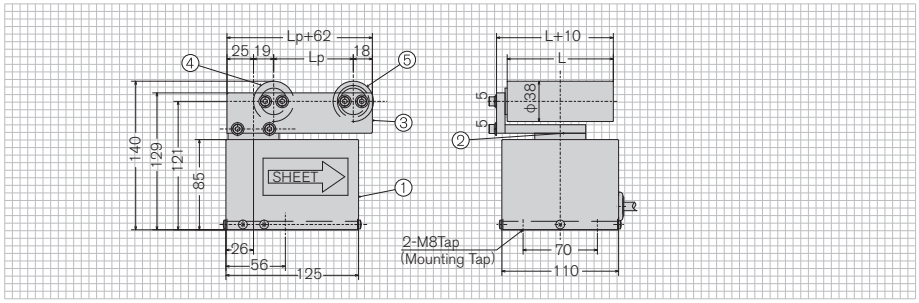

① Drive Part ② Pivot Stand ③ Roll Frame ④ Entry Roll ⑤ Exit Roll
L: Roll Length Lp: Roll Span

PG-50

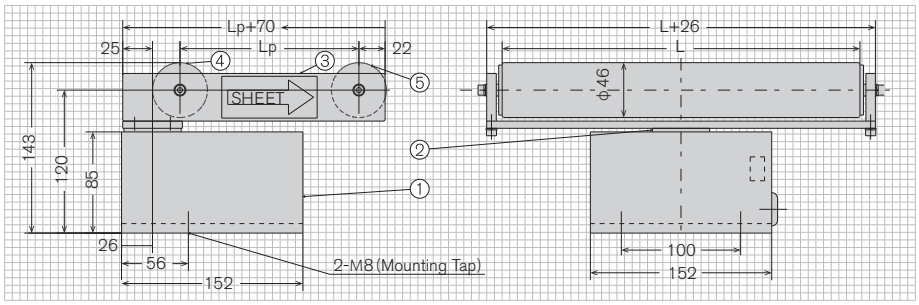

① Drive Part ② Pivot Stand ③ Roll Frame ④ Entry Roll ⑤ Exit Roll
L:Roll Length Lp:Roll Span

PG-80

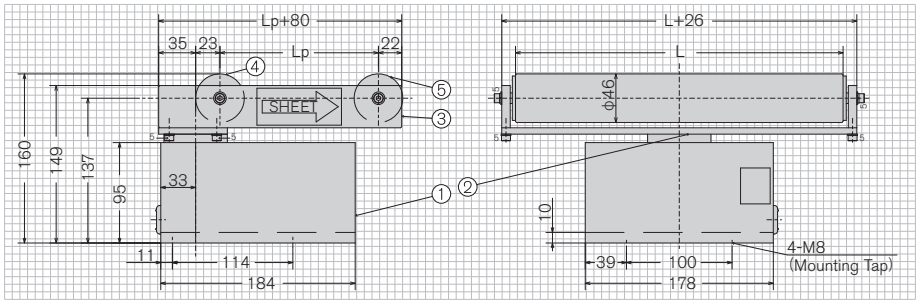

① Drive Part ② Pivot Stand ③ Roll Frame ④ Entry Roll ⑤ Exit Roll
L:Roll Length Lp:Roll Span

PG-100

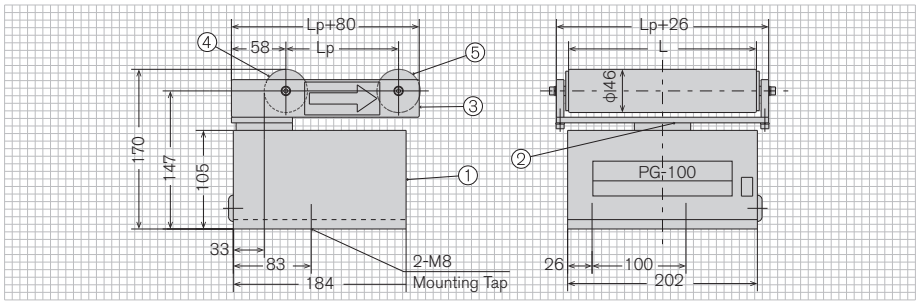

① Drive Part ② Pivot Stand ③ Roll Frame ④ Entry Roll ⑤ Exit Roll
L:Roll Length Lp:Roll Span

PG-110

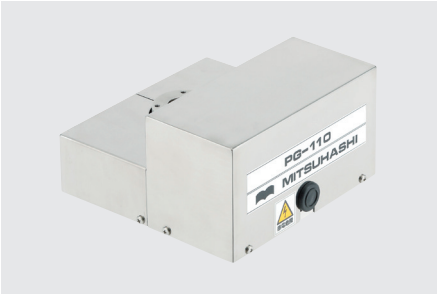

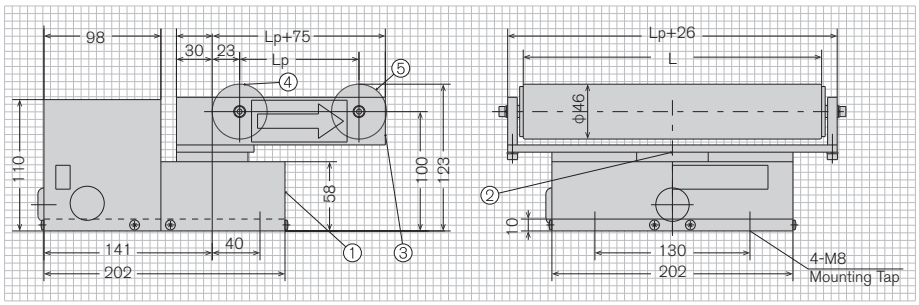

① Drive Part ② Pivot Stand ③ Roll Frame ④ Entry Roll ⑤ Exit Roll
L:Roll Length Lp:Roll Span

PG-701

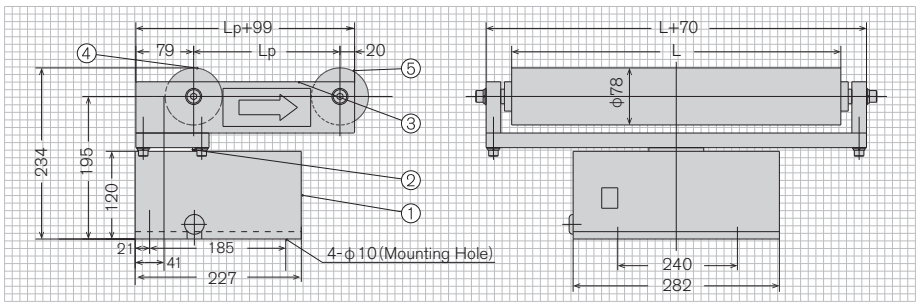

① Drive Part ② Pivot Stand ③ Roll Frame ④ Entry Roll ⑤ Exit Roll
L:Roll Length Lp:Roll Span

PG-800

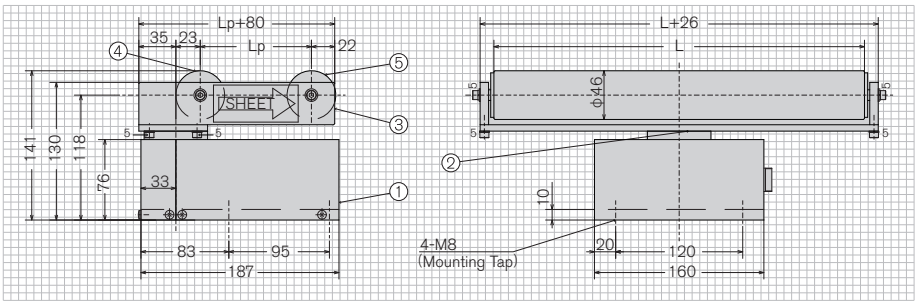

① Drive Part ② Pivot Stand ③ Roll Frame ④ Entry Roll ⑤ Exit Roll
L:Roll Length Lp:Roll Span

PG-400

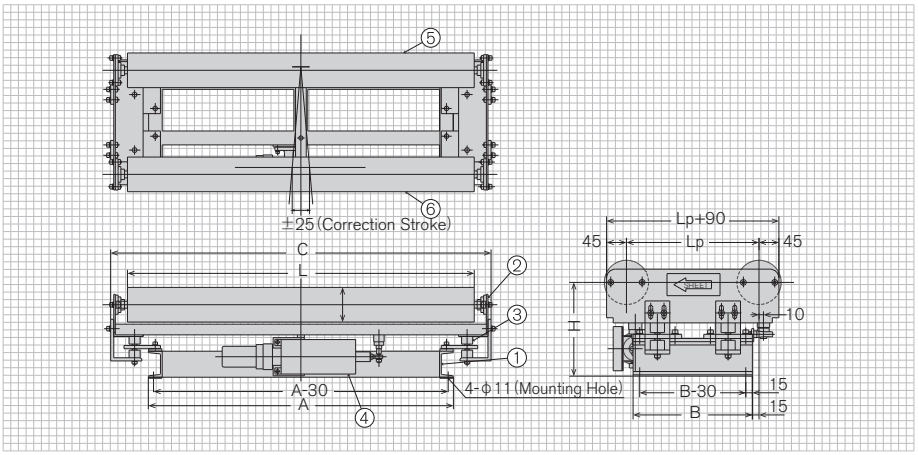

① Roll Base ② Roll Frame ③ Radial Bearing ④ PG-400Drive Part ⑤ Entry Roll ⑥ Exit Roll
L:Roll Length Lp:Roll Span

Size table

Lp \ L	600 ~700	701 ~800	801 ~900	901 ~1000	1001 ~1100	1101 ~1200	1201 ~1300	1301 ~1400	1401 ~1500	1501 ~1600
200~249	A=L-120 B=Lp-100 C=L+112 H=220	A=L-120 B=Lp-30 C=L+112 H=220	A=680 B=Lp-30 C=L+94 H=250							
250~299				A=880 B=Lp-30 C=L+94 H=250						
300~349						A=1080 B=Lp-30 C=L+94 H=250				
350~399									A=1280 H=250 B=Lp-30 C=L+94	
400										

PG-301

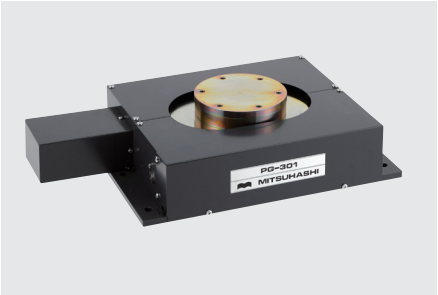

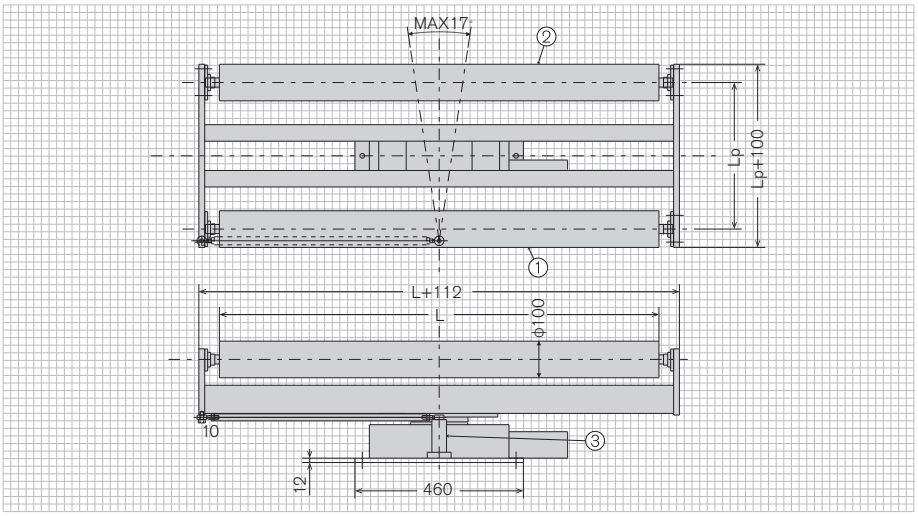

① Entry Roll ② Exit Roll ③ Pivot Stand L:Roll Length Lp:Roll Span

2. End Pivot Roll Guider (Steering Guide)

When a guide roll carries out circling movements to the virtual center distantly distant from now on, meandering is corrected using the law of the parallel incidence by a shift in a transverse direction, and inclination of a roll. "Looseness" generates one of an edge because a web will be in the plate bending state by this turning, and "growth" generates the other.
The distortion by this growth becomes bigger than the distortion by twisting of the offset Roll Guider. For this reason, distance from the entrance side fixed roll to a guide roll must be enlarged enough, and distortion by growth must be made small. Moreover, the quality of the material of the web is suitable for vinyl , polypropylene, textiles, a tire coat, etc. with a big pace of expansion.

Type	DC Motor	Correction Speed mm/sec	Maximum Correction Stroke mm	Web Speed m/min	Web Tension N/kgf	Roll Length mm	Roll Diameter mm	Roll Span mm
MR-100	DC24V 0.6A	4	± 45	150 (MAX)	98 (MAX) [10]	230 ~ 600	ϕ 46 (Standard)	100 ~ 250
MR-60	DC24V 1.5A	16	± 28	200 (MAX)	490 (MAX) [50]	800 (MAX)	ϕ 100 (Standard)	150 ~ 400
MR-65	DC24V 1.5A	16	± 28	200 (MAX)	627 (MAX) [64]	300 ~ 2000	ϕ 100 (Standard)	150 ~ 400
MR-210	DC24V 2A	10	± 85	200 (MAX)	980 [100]	440 ~ 2500	ϕ 100 (Standard)	150 ~ 400
MR-250	DC24V 2A	10	± 170	200 (MAX)	980 [100]	680 ~ 2500	ϕ 100 (Standard)	150 ~ 400

※ 1. 1N = 0.102kg　※ 2. Ambient Temperature　0℃~ 50℃　※ 3. MR-250 is a semi- standard model.

MR-100

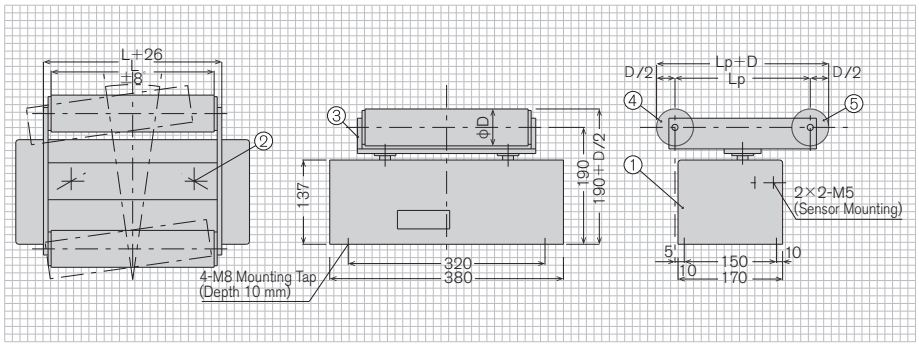

① Drive Part　② Pivot　③ Roll Frame　④ Entry Roll　⑤ Exit Roll
L:Roll Length　Lp:Roll Span

MR-60

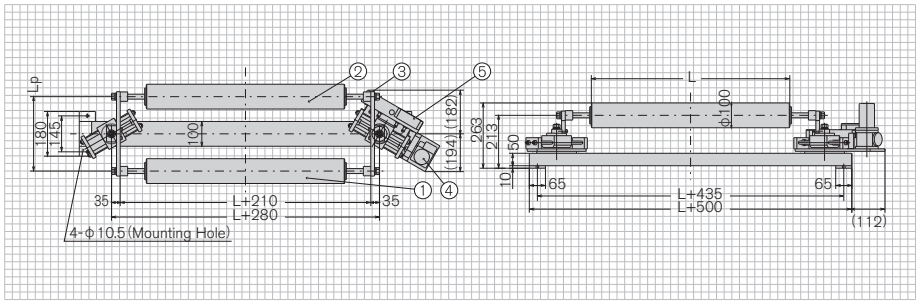

① Entry Roll　② Exit Roll　③ Roll Frame　④ Drive Part　⑤ Terminal Block
L:Roll Length　Lp:Roll Span

MR-65

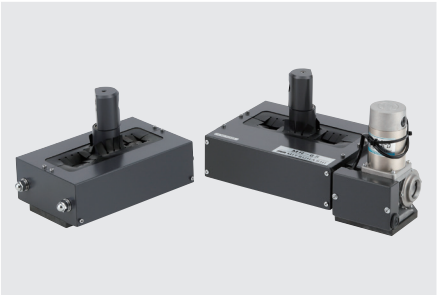

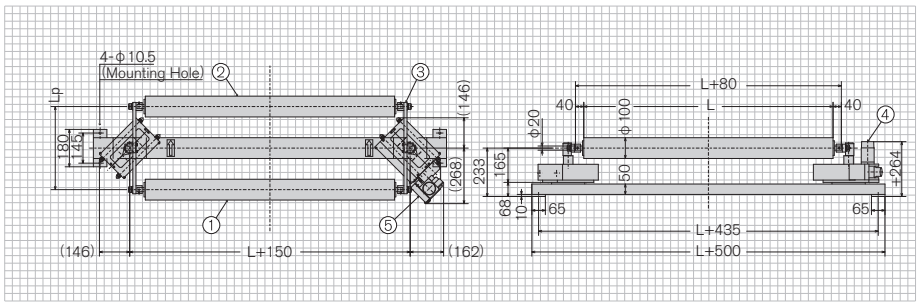

① Entry Roll　② Exit Roll　③ Roll Frame　④ Drive Part　⑤ Terminal Block
L:Roll Length　Lp:Roll Span

MR-210/250

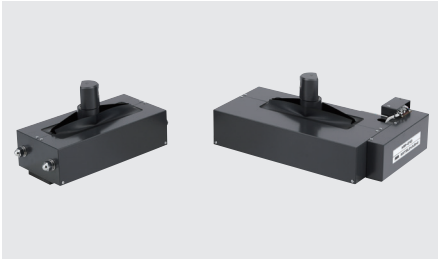

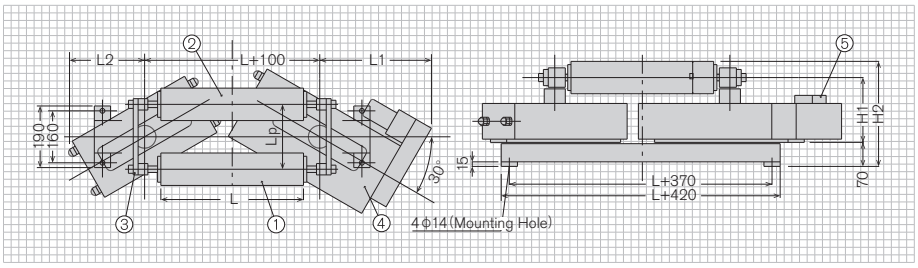

Type	L	L1	L2	LP	H1	H1
MR-210	440～2500	342	220	150～400	210	330
MR-250	680～2500	462	328		235	355

① Entry Roll ② Exit Roll ③ Roll Frame
④ Drive Part ⑤ Switching Unit

CONTROL MOTORS

Feature

1. The CM-type control motors use DC motors and are designed for use in combination with the controller, operation board and sensor as the driving unit of edge position control system.
2. These motors are of low-voltage high-current type for SCR servo control, giving great starting torque.
3. They offer outstanding speed characteristics and can perform instantaneous reverse operation. For these features, they are best suited for position control.

Type	Sort	Field Element	Armature	Rated Torque／Rotational Speed N·cm[kgf·cm]/rpm	Starting Torque N·cm[kgf·cm]	Mass kg
CM-402F	Direct-Current Motor with Speed Reducer	Permanent Magnet	DC24V 11A	784 [80]／100	2744 [280]	12
CM-412F				392 [40]／220	1372 [140]	

※ 1. Ambient Temperature 0℃～ 50℃ ※ 2. CM-402F and 412F are with a fan.

CM-402F/412F

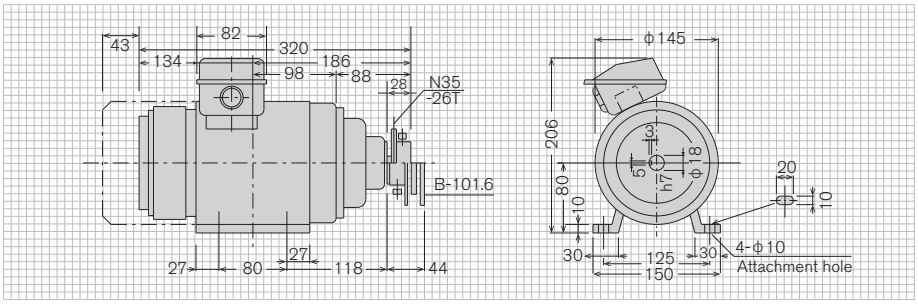

※ With a fan

402F and 412F -- an outside -- the same size

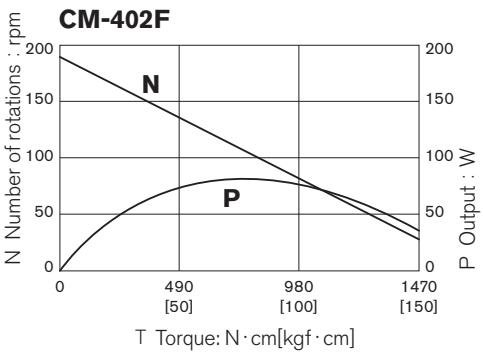

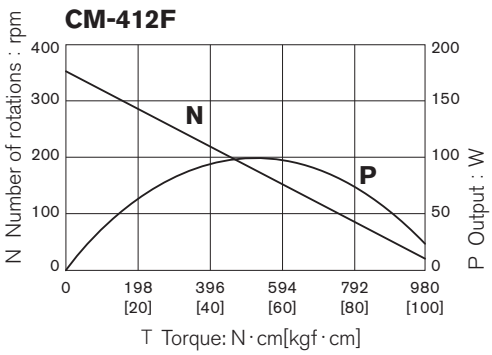

MITSUHASHI CORPORATION

Lending "hands" to replace human hands.

株式会社 三橋製作所
MITSUHASHI CORPORATION

Head Office
Postal Code 615-0082 1, Sekizan-cho, Yamanouchi,
Ukyo-ku, Kyoto, JAPAN
TEL 81-75-316-3300 (the sales department)
FAX 81-75-313-7595

Tokyo Branch (Export Office)
Postal Code 111-0043 YoshikuniKomagata-bldg.9F,
2-4-11, Komagata, Taitou-ku, Tokyo, JAPAN
TEL 81-3-3847-9751
FAX 81-3-3847-9753

Kyushu Branch
Postal Code 812-0016 Minamikindai-bldg.6F,
4-2-10, Hakataekiminami, Hakata-ku, Fukuoka, JAPAN
TEL 81-92-476-3800
FAX 81-92-476-3801

Shanghai Mitsuhashi trading company
Room 1314, 36 Lanes, 1200 chang qing Road, Shanghai,CHINA
TEL & FAX 86-21-5068-5366

In order to improve our products, specifications may change without notice

www.mitsuhashi-corp.co.jp

L-004E-A
231026SK